

FINAL INVESTIGATION REPORT ON ACCIDENT INVOLVING DIAMOND DA40 AIRCRAFT, VT-FGL BELONGING TO INDIRA GANDHI RASHTRIYA URAN AKADEMI ON 18 MARCH 2023 NEAR GONDIA

Aircraft Accident Investigation Bureau
Ministry of Civil Aviation
Government of India

FOREWORD

In accordance with Annex 13 to the Convention on International Civil Aviation Organization (ICAO) and Rule 3 of Aircraft (Investigation of Accidents and Incidents) Rules, 2017, the sole objective of the investigation of an Accident/Incident shall be the prevention of accidents and incidents and not to apportion blame or liability. The investigation conducted in accordance with the provisions of the above said rules shall be separate from any judicial or administrative proceedings to apportion blame or liability.

This document has been prepared based upon the evidences collected during the investigation, opinion obtained from the experts and laboratory examination of various components. Consequently, the use of this report for any purpose other than for the prevention of future accidents or incidents could lead to erroneous interpretations.

Contents

GLOSSARY 4
SYNOPSIS 8
1. FACTUAL INFORMATION 9
1.1 History of Flight 9
1.2 Injuries to persons 10
1.3 Damage to Aircraft 10
1.4 Other damage 10
1.5 Personnel Information 11
1.6 Aircraft Information 12
1.7 Meteorological Information 14
1.8 Aids to Navigation 15
1.9 Communication 15
1.10 Aerodrome Information 16
1.11 Flight Recorders 19
1.12 Wreckage and Impact Information 19
1.13 Medical and Pathological Information 20
1.14 Fire 20
1.15 Survival Aspects 21
1.16 Tests and Research 21
1.17 Organizational and Management Information 23
1.18 Additional Information 27
1.19 Useful or effective Investigation Techniques 29
2. ANALYSIS 30
2.1 Serviceability of Aircraft 30
2.2 Weather 30
2.3 Crew Aspect 31
2.4 Organisation Aspect 32
2.5 Accidents involving Flying Training Organisation Aircraft 33
2.6 Circumstances leading to the Accident 35
3. CONCLUSION 36
3.1 Findings 36
3.2 Probable cause of the accident 37
4. SAFETY RECOMMENDATIONS 37
APPENDIX A - Photographs of Aircraft Wreckage and Surroundings 39
APPENDIX B - DGCA Flying Training Circular 01 of 2022 42

GLOSSARY

AAI	Airport Authority of India
AAIB	Aircraft Accident Investigation Bureau
AD	Airworthiness Directives
ADS (B)	Automatic Dependent Surveillance (Broadcast)
AFI	Assistant Flight Instructor
AFIR	Assistant Flight Instructor Rating
AFM	Aircraft Flight Manual
AGL	Above Ground Level
AME	Aircraft Maintenance Engineer
AMSL	Above Mean Sea Level
ARC	Airworthiness Review Certificate
ATC	Air Traffic Control
ATS	Air Traffic Services
AUW	All Up Weight
BRG	Bearing
C of A	Certificate of Airworthiness
C of R	Certificate of Registration
CAR	Civil Aviation Requirements
CCTV	Closed-Circuit Television
CFI	Chief Flying Instructor
CFIT	Controlled Flight Into Terrain
CG	Center of Gravity
CPL	Commercial Pilot Licence
CRPF	Central Reserve Police Force
CSV	Comma Separated Values
CVR	Cockpit Voice Recorder
DCFI	Deputy Chief Flying Instructor
DFDR	Digital Flight Data Recorder
DGCA	Directorate General of Civil Aviation
DIS	Distance
DME	Distance Measuring Equipment
DY. CFI	Deputy Chief Flying Instructor
ELT	Emergency Locator Transmitter
ERP	Emergency Response Plan
FDA	Flight Data Analysis
FDTL	Flight Duty Time Limitation

FI	Flight Instructor
FIC	Flight Information Centre
FIR	Flight Information Region
FRTOL	Flight Radio Telephone Operator's Licence
ft.	Feet
FTO	Flight Training Organization
G/S	Glide Slope
GDA	Gondia
GFRP	Glass Fiber-Reinforced Plastic
GPS	Global Positioning System
Hrs	Hours
Hz.	Hertz
IATA	International Air Transport Association
ICAO	International Civil Aviation Organisation
IFR	Instrument Flight Rules
IGRUA	Indira Gandhi Rashtriya Uran Akademi
IMC	Instrument Meteorological Conditions
IMD	India Meteorological Department
IR	Instrument Rating
KM	Kilometer
Kt	Knots
LFA	Local Flying Area
Ltr.	Liter
MEL	Minimum Equipment List
MEOSAR	Medium Earth Orbit Search and Rescue
MET	Meteorological / Meteorology
MFD	Multi-Function Display
MHz	Megahertz
MLG	Main Landing Gear
MTOW	Maximum Take Off Weight
mtr.	Meter
NFTI	National Flying Training Institute
NLG	Nose Landing Gear
Nm	Nautical Miles
NOSIG	Not Significant
NRST	Nearest
NTSB	National Transportation Safety Board

PFD	Primary Flight Display
PIC	Pilot in Command
PPL	Private Pilot Licence
QNH	Query Nautical Height (Altitude Above Mean Sea Level)
R/T	Radio Telephony
RT	Radio Telephony
RTR	Radio Telephony Restricted
RWY	Runway
SAR	Search and rescue
SB	Service Bulletin
SCT	Scattered
SD	Secure Digital
SOP	Standard Operating Procedure
SPL	Student Pilot Licence
THR	Threshold
TPM	Training & Procedure Manual
TSN/TSO	Time Since New / Time Since Overhaul
TSRA	Thunderstorm with Rain
UTC	Universal Time Coordinated
v/s	Vertical Speed
VAGD	ICAO location code for Gondia Airport, Maharashtra, India
VAJB	ICAO location code for Jabalpur Airport, Madhya Pradesh, India
VANP	ICAO location code for Dr. Babasaheb Ambedkar International Airport, Nagpur, India
VERP	ICAO location code for Swami Vivekananda Airport, Raipur, India
VFR	Visual Flight Rules
VGDS	Visual Guidance Docking System
VHF	Very High Frequency
VMC	Visual Meteorological Conditions
VOR	VHF Omnidirectional Range
VRB	Variable

AIRCRAFT AND ACCIDENT DETAILS OF DIAMOND DA40 AIRCRAFT VT-FGL ON 18 MARCH 2023			
1.	Aircraft	Type	Diamond DA40
		Nationality	Indian
		Registration	VT-FGL
2.	Owner		M/s Indira Gandhi Rashtriya Uran Akademi (IGRUA)
3.	Operator		
4.	Country of Manufacture		Canada
5.	No. of Persons on board		02 (1 Instructor, 1 Student Pilot)
6.	Extent of Injuries		Both Instructor and Student pilot received Fatal injury
7.	Date & Time of Accident		18 March 2023 at 0953 UTC
8.	Place of Accident		Village Bhakkutola, Balaghat District, M. P
9.	Co-ordinates of Accident Site		Lat: 21° 36’ 34.24’’ N Long: 080° 32’ 34.91’’ E
10.	Last point of Departure		Gondia Airport
11.	Intended landing place		Gondia Airport
12.	Type of Operation		General Flying Training by Day
13.	Phase of operation		Flying training exercise (Local area)
14.	Type of Occurrence		Controlled Flight into Terrain (CFIT)

(All the timings in this report are in UTC unless otherwise specified)

SYNOPSIS

On 18 March 2023, M/s Indira Gandhi Rashtriya Udaan Akademi Diamond DA40 aircraft VT-FGL while operating a training flight met with an accident at Village Bhakkutola in District Balaghat, Madhya Pradesh. Both the instructor and student pilot on board sustained fatal injuries and the aircraft was destroyed.

The aircraft was scheduled for a Local General Flying Training by day. Before operating the flight, no abnormality was reported by the crew after carrying out the preflight inspection of the aircraft. The aircraft after obtaining necessary clearances from ATC was lined up on runway 04. ATC cleared the aircraft and it took off from Gondia at 0936 UTC.

The crew were instructed to report their position to ATC on RT after every 10 minutes as per the practice/SOP. At 0944 UTC, the aircraft reported their position as "10 DME out on radial 085° GDA maintaining altitude 5000 ft on QNH". The aircraft was instructed to give "Ops Normal" callout every 10 minutes as per SOP. However, there was no such call out given by the aircraft at 0954 UTC or thereafter as per the requirement. Since, no "Ops normal" call out was received by the aircraft, the ATC raised call on emergency frequency 121.5 MHz, however, there was no response from the aircraft. The ATC also requested other aircraft in air to establish contact with VT-FGL. However, there was no response. Mumbai and Nagpur ATC were also alerted about the missing aircraft.

At 1022 UTC, Gondia ATC received call from local police that VT-FGL has crashed in hills of Purarghat near village Bhakkutola, District Balaghat. The location of the crash site was confirmed as Radial 072°/15 Nm from Gondia. The ELT was activated and the distress signal was received by MEOSAR Satellite at 0953 UTC.

The occurrence was classified as an accident and an investigation was ordered by Director General, Aircraft Accident Investigation Bureau vide order No. INV-11011/03/2023-AAIB dated 19.03.2023 to investigate and determine the probable cause(s) and contributory factor(s) leading to the accident.

Unless otherwise indicated, recommendations in this report are addressed to the regulatory authorities of the State having the responsibility for the matters with which the recommendation is concerned. It is for those authorities to decide what action is taken.

1. FACTUAL INFORMATION

1.1 History of Flight

On 18 March 2023, the flying training activities could not be carried out in the morning as per the schedule as the weather conditions in the morning were not conducive to carry out the flying training activities. The flying training activities started in the afternoon after the Dy. CFI assessed the weather conditions which were found conducive to start the flying training exercise.

Initially, only 02 aircraft were released by the AME, i.e. Diamond DA40 aircraft VT-FGJ & VT-FGL and handed over to the operations department for flying training. No fueling was done on the aircraft VT-FGL on 18.03.2023 as total fuel quantity was recorded to be full tank (188 Ltr.). Last fuel uplift was done after post flight on 17.03.2023. Engine oil was checked and 500 ml oil was replenished. Before handing over the aircraft to operations department, the AME carried out the first pre-flight inspection of the aircraft VT-FGL at around 0845 UTC and no abnormality was observed.

The student pilot was authorized to carry out instrument flying training along with an instructor on VT-FGL. No abnormality was reported by the crew before operating the flight. At around 0932 UTC, the aircraft contacted the tower and informed that the aircraft is ready for departure and requested for sector east. The ATC subsequently cleared the aircraft for departure from runway 04 with instruction to maintain 5000 feet for sector east. The aircraft acknowledged the same and informed that it will climb and maintain 5000 feet and will turn right for sector east. At 093415 UTC, the crew informed tower that they are ready for departure and accordingly the tower cleared the aircraft for lineup runway 04. At 093554, the tower cleared the aircraft for take-off and the aircraft took-off from runway 04. After take-off, at around 093854 UTC, the aircraft reported turning right for sector east and further informed that they will call after establishing sector east.

At 094415 UTC, the aircraft informed that they are 10 miles and maintaining 5000 feet in sector east. At 094423, the tower cleared the aircraft to operate in sector east between 15 miles to 25 miles and instructed to report “All Ops Normal” call every 10 minutes as per the procedure. The aircraft acknowledged the same. This call was made by the aircraft at around 094431 UTC and it was supposed to make the call out at around 0954 UTC, however, no such call out was made by the aircraft. On not receiving any call from the aircraft, the ATC at 095532 made a call out to VT-FGL to confirm All Ops Normal, however, there was no response from the aircraft. The ATC made another attempt to establish contact with the aircraft VT-FGL at 095618 UTC, however, there was no response from the aircraft this time also. The ATC made another 2 to 3 attempt to try and establish contact with the aircraft but there was no response from the aircraft. Thereafter, ATC tried to establish contact on the emergency frequency but still there was no response from VT-FGL. Another company aircraft VT-FGJ which was operating in sector west also made some calls to the aircraft VT-FGL but there was no response from VT-FGL.

The aircraft VT-FGJ thereafter went to sector east in search of VT-FGL after taking necessary clearance from ATC. The ATC also gave traffic information of VT-FGL to VT-FGJ. VT-FGJ operated in sector east maintaining 6000 feet altitude and within 15 to 25 DME. The crew of VT-FGJ could

not locate the aircraft VT-FGL. Meanwhile, at around 1022 UTC, the ATC received call from local police regarding suspected crash site near Balaghat Hills. Thereafter, at around 1030 UTC, the ATC received call from Local Authorities, Balaghat confirming reports of the crash and informed the location of the crash site. The ATC then called the aircraft VT-FGJ and informed about the crash. The aircraft VT-FGJ thereafter came back to base. ERP was activated by the ATC for off-base accident. After receiving the information about the crash, the FI along with Dy. CFI and other instructors left for crash site, however, they could not make it to crash site as the site was at top of a hill and the time was already post sunset. CRPF personnel along with local villagers recovered the body from the crash site. The crash site was at a distance of about 15 Nm at radial 074° from Gondia. The aircraft was destroyed and was completely burnt. Both the onboard occupants lost their lives due to burn injuries as a result of the aircraft being engulfed in fire due to impact with the hill. FIC (Mumbai) terminated the SAR at 1300 UTC.



Fig 1: Geographical location of Accident Site (15 Nm on radial 074° from Gondia Airport)

1.2 Injuries to persons

Injuries	Crew	Passenger	Others
Fatal	02	Nil	Nil
Serious	Nil	Nil	Nil
Minor/ None	Nil	Nil	Nil

1.3 Damage to Aircraft

The aircraft was completely destroyed during the accident and was fully burnt as it caught fire due to heavy impact with the hill. Details of aircraft damage is provided in Para 1.12 of the report.

1.4 Other damage

Nil

1.5 Personnel Information

1.5.1 Crew Information – Instructor

Nationality	India
Gender	Male
Date of Joining to the Organization (As AFI)	09.05.2022
Age	24 Years 04 Months
License	CPL
Date of Issue	15.05.2019
Valid up to	14.05.2024
Category	Aeroplane
Date of Class-II Medical Exam	21.10.2022
Class-II Medical valid up to	26.10.2023
Date of issue FRTOL License	15.05.2019
FRTOL license valid up to	14.05.2024
Endorsement as PIC	DA-40
Total flying experience	802:50 Hours
Total flying experience on type	802:50 Hours
Last flown on type	17.03.2023
Total flying experience during last 1 year	560:50 Hours
Total flying experience during last 6 months	258:55 Hours
Total flying experience during last 30 days	31:25 Hours
Total flying experience during last 7 days	05:55 Hours
Total flying experience during last 24 hours	00:45 Hours
Rest period before flight	21:22 Hours
Whether involved in Accident/ Incident earlier	NO

The instructor did his CPL training from IGRUA only. Later, after completing the CPL training, the instructor joined IGRUA in Dec 2019 and worked as a flight dispatcher for more than 01 year. Subsequently, in May 2022, after completing instructional training from IGRUA, the instructor joined as AFI with 242 hrs. of total flying experience. The instructor was not involved in any accident or incident earlier.

1.5.2 Student Pilot

Nationality	India
Gender	Female
Date of Joining to the Organization	January 2022
Age	19 Years 03 Months
License	SPL
Date of Issue	24.05.2022
Valid up to	23.05.2032
Category	Aeroplane
Date of Class-II Medical Exam	28.01.2022
Class-II Medical valid up to	27.01.2024

Date of issue FRTOL License	14.07.2022
FRTOL license valid up to	13.07.2032
Total flying experience	55:05 Hours
Total flying experience on type	55:05 Hours
Last flown on type	17.03.2023
Total flying experience during last 1 year	55:05 Hours
Total flying experience during last 6 months	29:30 Hours
Total flying experience during last 30 days	20:50 Hours
Total flying experience during last 7 days	04:20 Hours
Total flying experience during last 24 hours	Nil
Rest period before flight	22 Hours
Whether involved in Accident/ Incident earlier	No

Both Instructor and Student Pilot had adequate rest prior to operating the accident flight. Both were familiar with the flying restrictions in and around Gondia, as they have been flying in Gondia for considerable time.

1.6 Aircraft Information

1.6.1 General Information: Diamond DA 40

The aircraft is manufactured by M/s Diamond Aircraft Industries Inc., Canada, and is equipped with variable pitch propeller, T- tail, low wing & fixed tricycle landing gear. It is a semi - monocoque, composite aircraft having GFRP structure.

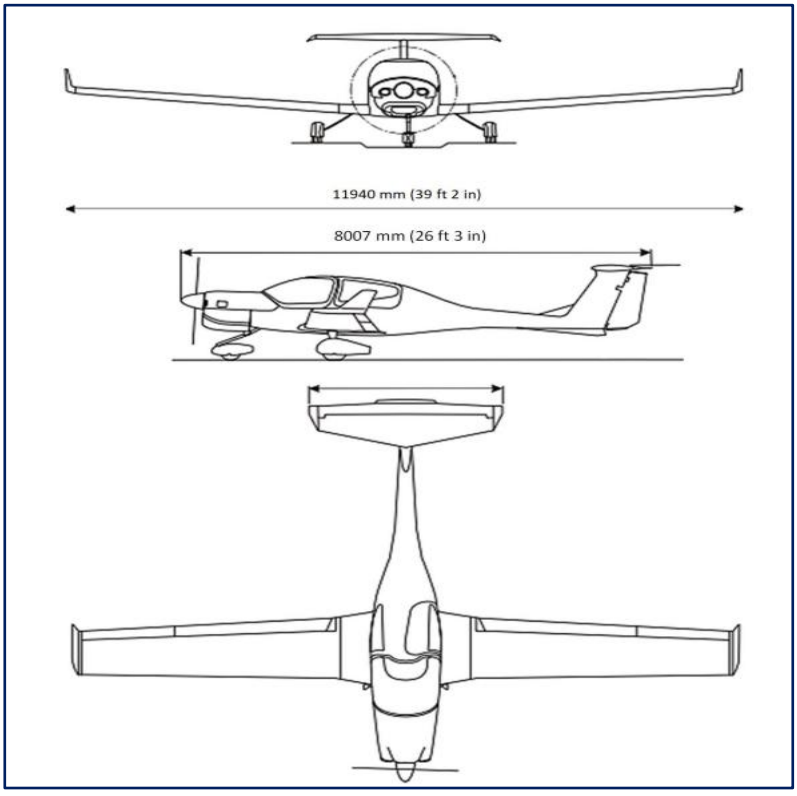

Fig 2: Aircraft Dimensions

The aircraft is powered by Lycoming IO-360-M1A engine which is a fuel injected, direct drive, four cylinders, horizontally opposed, air cooled normally aspirated engine. The engine has a rated maximum continuous power of 180 hp at 2700 RPM at Standard Sea level conditions.

The aircraft power generation has two main Systems: a) Air intake system. This system supplies air from the air inlet via induction filter to the engine intake manifold. b) Engine fuel system. The engine fuel system takes fuel from the airplane fuel system and injects it into the cylinders.

The propeller turns in a clockwise direction when viewed form the cockpit. The air intake is located in the lower center of the cowling and supplies air to the engine air filter. The bottom cowling has the air intakes. The left intake gives cooling air for the engine. The right intake supplies air for the engine, the oil cooler, cabin heating, battery cooling, and alternator cooling.

1.6.2 Aircraft Specific Information (VT-FGL)

The aircraft is registered under category 'Normal' with sub category 'Passenger' and the minimum number of crew specified to operate this aircraft is 'ONE' as per its C of A.

1.6.2.1 Aircraft Information

Aircraft Model	Diamond DA40
Aircraft S. No.	40.1024
Year of Manufacture	2009
Name of Owner	Indira Gandhi Rashtriya Uran Akademi
C of R / validity	3986, issued on 30.07.2009 & valid
C of A / validity	6095, subject to validity of ARC.
Category	Normal
ARC issued on	01 June 2022
ARC valid up to	31 May 2023
Aircraft Empty Weight	819 kg
Maximum Take-off weight	1200 kg
Date of Aircraft weighment	21 Nov 2016
Max Usable Fuel	137:03 kg
Max Pay load with full fuel	158.97 kg
Empty Weight CG	2.45 Meter Aft of Datum
Total Aircraft Hours (Time Since New)	9047:51 hrs
Last inspection	- Compliance of SB388C on 15.03.2023 - 100 hrs/06 Months inspection on 11.03.2023
List of repairs carried out after last major inspection till date of accident.	Nil
Engine Type	Lycoming IO-360-M1A
Engine Sl. No.	L-34407-51E
Last inspection	- Compliance of SB388C on 15.03.2023 - 100 hrs/06 Months inspection on 11.03.2023

List of repairs carried out after last major inspection till date of accident	Nil
Total Engine Hours TSN/TSO	5581:12 Hrs/1595:08 Hrs
Aero mobile License	valid up to 31 Dec 2023
AD, SB, Modification complied	Complied
Aircraft flying under any MEL invoked	No

No entry of pending defect/MEL was found in aircraft logbook and engine logbook. All concerned Airworthiness Directives and Mandatory Service Bulletins, DGCA Mandatory Modifications on the aircraft and its engine were complied with as on date of accident.

1.7 Meteorological Information

As per general procedure, for conducting flying training activities, the local visibility was generally reported by IGRUA/NFTI based on the visibility chart available for Gondia. All other MET parameters such as temperature, QNH, winds were recorded by ATC through weather monitor equipment kept in the ATC tower. The hourly record for complete METAR was usually kept in NFTI operations room. As a general practice METAR of nearby stations such as Nagpur (VANP), Raipur (VERP), Jabalpur (VAJB), etc. were also recorded for reference. The weather information for nearby stations were taken from the IMD website and recorded in the register. On the day of accident, following MET information were recorded in the MET register for Gondia and nearby stations:

Station	Time (UTC)	Winds (°/Kts)	Visibility (Meters)	Temp (˚C)	QNH
VAGD (Gondia)	0700	140/03	5000 (Hz)	21	1014
	0800	150/07	5000 (Hz)	23	1013
	0900	180/09	5000 (Hz)	24	1012
	1000	135/08	5000 (Hz)	28	1011
VANP (Nagpur)	0700	070/02	4000 (Hz)	26	1014
	0800	060/04	4000 (Hz)	27	1013
	0900	110/05	4000 (Hz)	27	1012
	1000	090/04	4000 (Hz)	27	1010
VERP (Raipur)	0700	280/10	2000 (TSRA)	20	1014
	0800	010/08	3000 (TSRA)	21	1012
	0900	330/05	5000 (Hz)	19	1012
	1000	050/05	5000 (Hz)	20	1011
VAJB (Jabalpur)	0700	150/09	6000	26	1013
	0800	200/07	6000	26	1012
	0900	240/02	6000	28	1011
	1000	180/07	5000 (Hz)	29	1010

The local weather at Gondia in the morning on 18 March 2023 was not conducive to carry out the flying training activities and the visibility was found to be varying from 1500 m to 3000 m. However, the weather improved in the afternoon and the flying training activities were started in the afternoon when the visibility was found good for flying training operations.

1.8 Aids to Navigation

The aircraft was equipped with GPS to assist in navigation. Gondia Aerodrome is equipped with VOR/DME.

1.9 Communication

Aircraft was fitted with a VHF radio set to cater for communication while flying. As per the statement of person manning the tower, there was always positive two-way communication between the ATC and the aircraft on local frequency 122.175 MHz.

The salient ATC tape transcript after the aircraft took-off from Gondia is appended below: -

Time (UTC)	Call By	Transcript
09:35:51	VT-FGL	Foxtrot Golf Lima is ready for departure
09:35:54	Tower	Foxtrot Golf Lima RWY04 Cleared for take off
09:35:57	VT-FGL	Cleared for take-off Foxtrot Golf Lima
09:38:54	VT-FGL	Tower Foxtrot Golf Lima turning right for sector east
09:38:58	Tower	Foxtrot Golf Lima next report established sector south correction next report establish sector east.
09:39:03	VT-FGL	Call you when established sector east Golf Lima
09:44:15	VT-FGL	one zero miles in, maintaining five thousand feet sector east
09:44:23	Tower	Foxtrot Golf Lima cleared to operate Sector East between One five miles to two five miles. Report all ops normal every one zero.
09:44:31	VT-FGL	Maintain between one five to two five will maintain five thousand feet and will call ops normal every one zero Foxtrot Golf Lima.
09:55:32	Tower	Foxtrot golf Lima Confirm All Ops Normal
09:56:18	Tower	Foxtrot Golf Lima tower
09:58:40	Tower	Tango Foxtrot Golf Lima Tower
10:00:50	Tower	Tango Foxtrot Golf Lima Gondia Tower How do you read?

The last call made by the aircraft VT-FGL was at 094431 UTC when it read back the instruction given by the ATC after establishing sector east for carrying out desired flying training activity.

As per the instruction given by the ATC, the aircraft VT-FGL was supposed to give “All Ops Normal” call at around 0954 UTC, however, no such call was made by the aircraft VT-FGL. Other company aircraft VT-FGJ which was also operating at that time tried to establish contact with VT-FGL on 122.175 MHz and also on company frequency 129.95 MHz, however, there was no response. ATC also tried to establish contact through emergency frequency 121.5 MHz but there was no response from the aircraft. Further, the aircraft did not make any distress call or any call to request for change in altitude or heading after making call for establishing sector east for carrying out the authorized flying training.

1.10 Aerodrome Information

1.10.1 General Information

Gondia Airport known as Birsi Airport is situated in Gondia district in Mahrashtra. The airport is owned and maintained by the Airports Authority of India. Following are the relevant details of the airport as per the approved Aerodrome Manual.

Name of the aerodrome	Birsi Airport, Gondia
Location of the aerodrome	NORTH EAST, 16 KM from Gondia City
Geographical coordinates of the Aerodrome Reference Point	21^0 31' 24.80974" N 080^0 17' 15.69090" E
Aerodrome Reference Code No. & Letter	Code No. 4 and C
Elevation	994 ft (303.1 meter)
Aerodrome Reference Temperature	46°C
Aerodrome Beacon	Flashing White and Green
Type of Traffic permitted (IFR/VFR)	VFR
Operational Hours	As ATS
List of approved exemptions	NIL
Runway designations	RWY 04/22
Length and Width, RWY 04 RWY 22	2135 mtr x 45 mtr 2135 mtr x 45 mtr
Slope	Long Slope: 0.335% / Trans Slope: 1%
Type of Runway RWY 04 RWY 22	 Non-INSTRUMENT Runway Non-INSTRUMENT Runway
Landing -T	Available
Wind cone	Available
Runway Markings	RWY Designator, THR, Aiming Point, Touchdown zone, Centre Line, RWY edge lights primary and secondary circuits provided
Taxiway Markings/lights	TWY Edge, Centre Line, Holding Position, Taxiway edge lights
Apron Markings/lights	Parking guidelines marking, Aircraft Stand Marking, floodlights available. VGDS NOT AVAILABLE. Standby power available switch over time less than 30 secs.
Rescue and fire fighting	Cat: 5

1.10.2 Flying Training Activities

As on date of accident, the Air Traffic Control Services in Gondia were being provided by AAI other than that for flying training operations. For flying training operations, the traffic was being handled by another FTO i.e. NFTI which also operates from Gondia along with IGRUA. After the watch hours for commercial and other aircraft operations, the AAI withdraws the ATS services for flying training operations which is being handled by NFTI. Hence, the flying training operations being carried out at Gondia were uncontrolled. While operating at Gondia base, the operator follows SOP provided by NFTI. Following are the salient procedures defined in the SOP.

Extent of local Flying Area (LFA) Gondia local flying area extends to 25 nm around the airfield from ground level to 8000 ft AMSL. The minimum sector altitude is 3800 ft in all sectors. The area of 5 nm around the airfield is reserved for aircraft leaving/ re-joining circuit and circuit flying. Instrument approaches are possible on both runways 04 and 22. Gondia is on radial 230, about 7nm from the airfield. Aircraft are not to overfly Gondia town below 3000 ft except for instrument approaches.

Airspace for Sector Flying. The available airspace beyond 10 nm to 25 nm from Gondia is divided into six sectors. They may be further divided into inner sector and outer sector depending on requirement. The sector radials from VOR 114.2 GDA are as follows: -

a. **North**: Sector Radial-005. Sector Boundary between radials 355 & 015 (Sector not approved for solo flying due to high terrain).
b. **East:** Sector Radial-085. Sector Boundary between radials 075 & 095 (Sector not approved for solo flying due to high terrain).
c. **South East:** Sector Radial- 135. Sector Boundary between radials 125 & 145.
d. **South:** Sector Radial-185. Sector Boundary between radials 175 & 195.
e. **West:** Sector Radial -265. Sector Boundary between radials 255 & 275.
f. **North West:** Sector Radial-315. Sector Boundary between radials 305 & 325.

Prominent Town / landmarks. The bearing and distance of prominent landmarks from Gondia airfield are: -

Balaghat	350/18 nm (Sector North)
Lanji	093/15 nm (Sector South East)
Amgaon	150/12 nm (Sector south east)
Road/Rly bridge	240/25 nm (Near Tumsar)
River Fork	270/19 nm (Sector West)
Railway bridge	330/8 nm (Sector North)
Waraseoni	316/18 nm (Sector North-West)
Adani Power Plant	253/20 nm (Near Khamtalai)

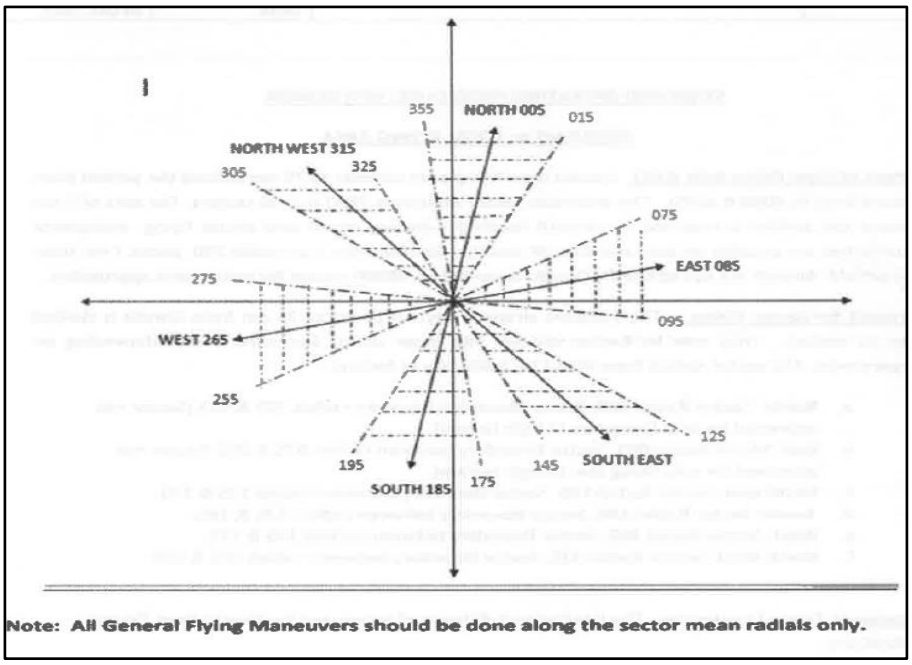

Fig 3: Sector radials at Gondia.

Communication Failure. Pilots unable to establish two -way contact with Gondia ATC will: -

a. Re- check frequency and RT set/ volume selections, headset volume and connectors
b. Try to contact other aircraft on the same frequency and relay their message
c. If unable to contact any agency, continue blind transmissions. Do not jam the channel.
d. Maintain VFR and descend to 3800ft on last known QNH in allotted sector. When airfield is in sight, descend further to 1500 ft AGL before reaching 5 nm from GDA.
e. Ascertain runway in use and position on dead side at circuit height, keeping clear of circuit as for re-join. At night, repeatedly switch on/off the landing light to indicate RT u/s.
f. Carry out a wide circuit pattern and position on finals at 600 ft AGL, keep clear of other aircraft.
g. Fly over the runway at 300 ft AGL rocking the wings in front of ATC. At night, repeatedly switch On and Off the landing light to attract attention.
h. Subsequently, carry out a normal circuit and land on steady green signal from ATC.

Note: In case of any aircraft in sector out of R/T contact for more than 15 min, ATC will ask other aircraft to try and establish contact and prepare for recovery of the aircraft without R/T.

Procedure when Uncertain of position. When uncertain of position, stay calm. Note the fuel available, present time and time of last known position. The aircraft will be within a circle of radius equal to 2 time elapsed, from last known position (at approx. 120 kts G/S). Guidelines for further actions are as follows:

a. Check serviceability and integrity of Garmin 1000, VOR, NDB and magnetic standby compass. Check GPS status on MFD.
b. Select NRST on PFD and check BRG/DIS for the nearest airfield from your position. If too far from Gondia/ or there is bad whether enroute base, choose the best possible diversion. Select “DIRECT TO” to base /diversionary airfield and steer the given course after confirming ground position. Note the time to go and estimated fuel consumption.

c. If you have doubts about G-1000 serviceability, fly for max endurance, set RPM 2300, MAP 19-20" and lean the mixture to 8.5 gal/hr (above 5000 ft).
d. Try to establish VMC and ground in contact. Do not descend below safety altitude in case of flying in IMC/ above clouds.

1.11 Flight Recorders

Flight Data Recorders i.e., Cockpit Voice Recorder (CVR)/Digital Flight Data Recorder (DFDR) were not installed on the aircraft. DGCA's Civil Aviation Requirement, Section 2 Series I Part V does not mandate the same.

1.11.1 Data from Garmin Units

The diamond DA40 aircraft is equipped with Garmin G1000 unit which records some aircraft parameters. Each sortie is recorded in an individual file in Excel CSV (Comma Separated Values) file that records the parameters of the aircraft every second after the powering ON of the electrical systems. These data are compared against pre-defined envelopes and values, to check whether the aircraft has been flown outside the scope of the standard operating procedures (safety events) as published in the TPM.

As the aircraft was completely burnt during the accident, the Garmin unit along with the memory cards got burned and could not be recovered from the wreckage for further analysis.

1.12 Wreckage and Impact Information

1.12.1 Flight path and impact information

The aircraft was cleared to operate in sector east on radial 085° within 15 to 25 Nm of Gondia to carry out the desired Flying training exercise. The aircraft called out that they will be maintaining 5000 feet altitude. As per the statement of the eyewitnesses the aircraft flew over the village Bhakkutola at a very low altitude. They further stated that although the aircraft was flying very low over the trees and bushes but it did not hit them. The aircraft then suddenly climbed and headed towards the nearby hills where it crashed.

The aircraft had hit few trees just before the point of impact with the terrain, as some of their branches were found broken near the point of impact. The aircraft had hit the top of a hill and then rolled down the hill for about 40 meters, before coming to final rest position. Looking at the point of impact with the terrain and the condition of the wreckage which was found completely burnt, it is evident that the aircraft had hit the terrain at a very high speed. The impact was such that it immediately caught fire and rolled down the hill in burning condition as trail of burn marks were observed on the hill terrain from the point of impact till the final position. It appears that the aircraft kept on burning even after it came to rest. The accident location was found to be at a distance of about 15 Nm at radial 75° from Gondia. The elevation of the accident site was recorded to be 497m (1630 feet).

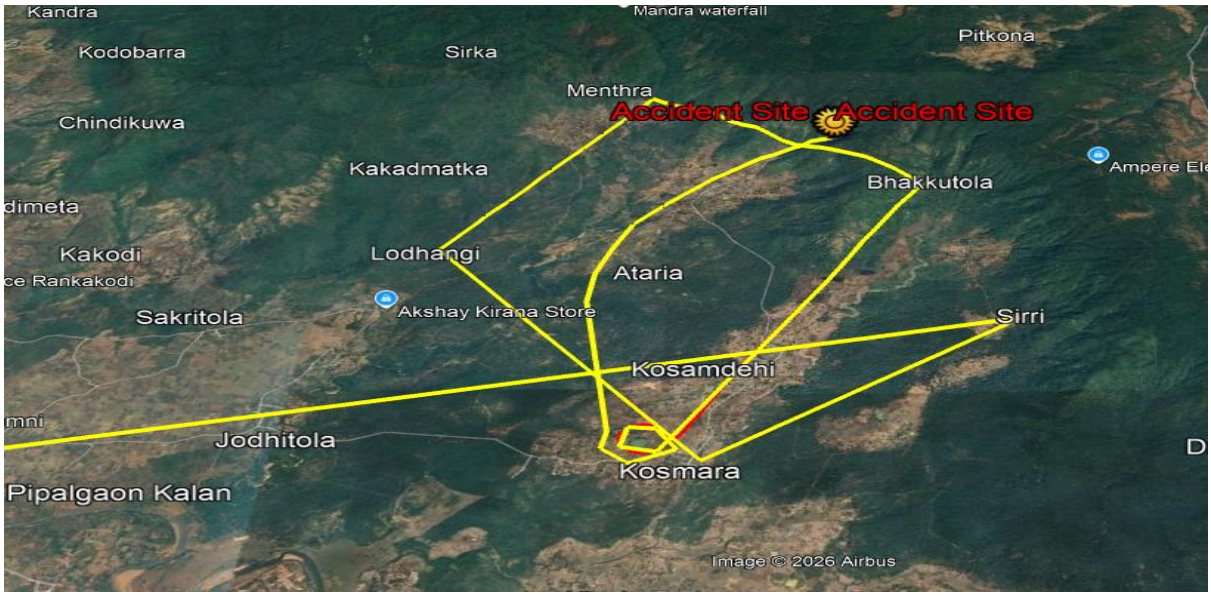

Fig 4: Probable flight path as per eyewitnesses

1.12.2 Wreckage Information

Some of the identifiable aircraft parts which were recovered from the accident site are as follows: -

- Some parts of the aircraft such as nose landing gear with strut, one main landing gear wheel and some unburnt airframe parts (small parts of wing) were retrieved from the accident site by the CRPF personnel as the accident site was not cordoned. These parts were found nearby the main wreckage.
- The nose landing gear probably sheared off from the structure immediately after the impact as there were no burning marks on it.
- The engine was found with the burnt wreckage in the final position. The engine was found with complete burn marks externally.
- The propellers were found attached to the engine but were found bent from the tip with burning marks.
- The cockpit and other fuselage parts were completely burnt and were not identifiable.

Some of the salient photographs of the wreckage and accident site is enclosed in Annexure A of the report.

1.13 Medical and Pathological Information

Both student Pilot and Instructor were subjected to Breath Analyzer test and found negative before they were authorized for training flight. The bodies of both the instructor and student pilot was found in completely burnt condition at the accident site.

1.14 Fire

The aircraft caught fire immediately after impacting with the terrain. The aircraft rolled down the hill in burning condition and kept on burning even after it came to final resting position. The

wreckage was found completely burnt. Trail of burning marks were observed in and around the point of impact and final wreckage position. The eyewitnesses who saw the aircraft informed that they did not see any fire in the aircraft while it was flying very low over the village before heading towards the hill where it crashed.

1.15 Survival Aspects

The aircraft hit the mountain probably at a very high speed which led to fire immediately after impact with the terrain. It was evident that the aircraft was subjected to very high impact with the terrain as the wreckage was found completely burnt and shattered.

Some of the villagers were observing the aircraft from ground and saw the aircraft heading towards the hill after flying over the village. They heard the sound of aircraft crashing into nearby hill and immediately informed the local police authorities about the same. The villagers then rushed towards the accident site to rescue the occupants of the aircraft as advised by the local authorities. As per the video footage which was circulated after the accident (probably taken by the local villagers after reaching the accident site) the instructor was found lying beside the wreckage and in completely burnt condition. The body of the instructor was very still with no movement while some of the body parts were still burning. The wreckage was found in burning condition with more than half of the wreckage already burnt.

The body of the student pilot was recovered later by the local authorities which was found within the burnt wreckage. The body of the student pilot was also found in completely burnt condition and could be recovered only after digging into the burnt aircraft wreckage.

The instructor was probably thrown out of the aircraft while it was rolling down the hill after impact with terrain in burning condition. The student pilot probably remained inside the aircraft even after the impact. Both the instructor and student pilot could not survive the injuries sustained during the accident.

The accident site was almost on top of a hill and at a height of about 600 to 650 feet AGL. The accident site was within a dense jungle and was difficult to access. The access to the accident site was through difficult terrain where there were no trails. Hence, it can be corroborated that the accident was not survivable.

1.16 Tests and Research

1.16.1 Strip examination of the engine

The engine was retrieved from the aircraft wreckage and was quarantined for further detailed examination. The engine was strip examined at a DGCA approved facility.

Following are the salient findings of the engine strip examination:

- The external condition of the engine was found burnt and extensive damage to the external parts including the four cylinders found damaged.
- There was no damage observed on all internal parts.

- The bearings of crankshaft journals were found in good condition and were found in their original position.
- Connecting rods of all the four cylinder were in good condition and their bearings at piston end and crankshaft end were in their position and in good condition.
- Pistons of all the cylinders were in good condition.
- The damages to all the external parts & accessories were due to impact.



Fig 5: Engine view from Front

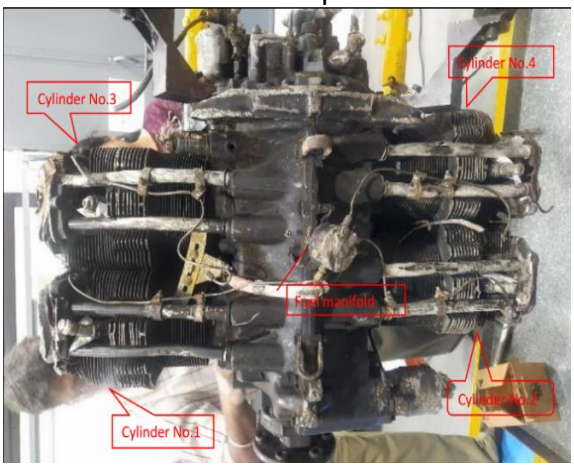

Fig 6: Top View

- The number 2 & 4 cylinder side have suffered more post-accident fire which is evident from the condition of the rocker arm covers and the rocker arms of these cylinders and the Cylinders.



Fig 7: Crank shaft



Fig 8: Cam shaft





Fig 9 & 10: Oil Pump Gear

From the above observations it was concluded that the external surfaces of the engine and accessories had suffered extensive damages due to post fire and impact. However, with good condition of all the internal parts the engine might be operating normal. Malfunction of the engine was not suspected.

1.17 Organizational and Management Information

1.17.1 Indira Gandhi Rashtriya Uran Akademi (IGRUA)

Indira Gandhi Rashtriya Uran Akademi (IGRUA) is a flying training Organization located at Fursatganj, District Raebareli, Uttar Pradesh. It was set up in 1985 as an autonomous body under the Ministry of Civil Aviation through its governing council being the supreme body of the organization headed by the Secretary to the Ministry of Civil Aviation. However, the flying training operations at IGRUA commenced from Oct 1986.

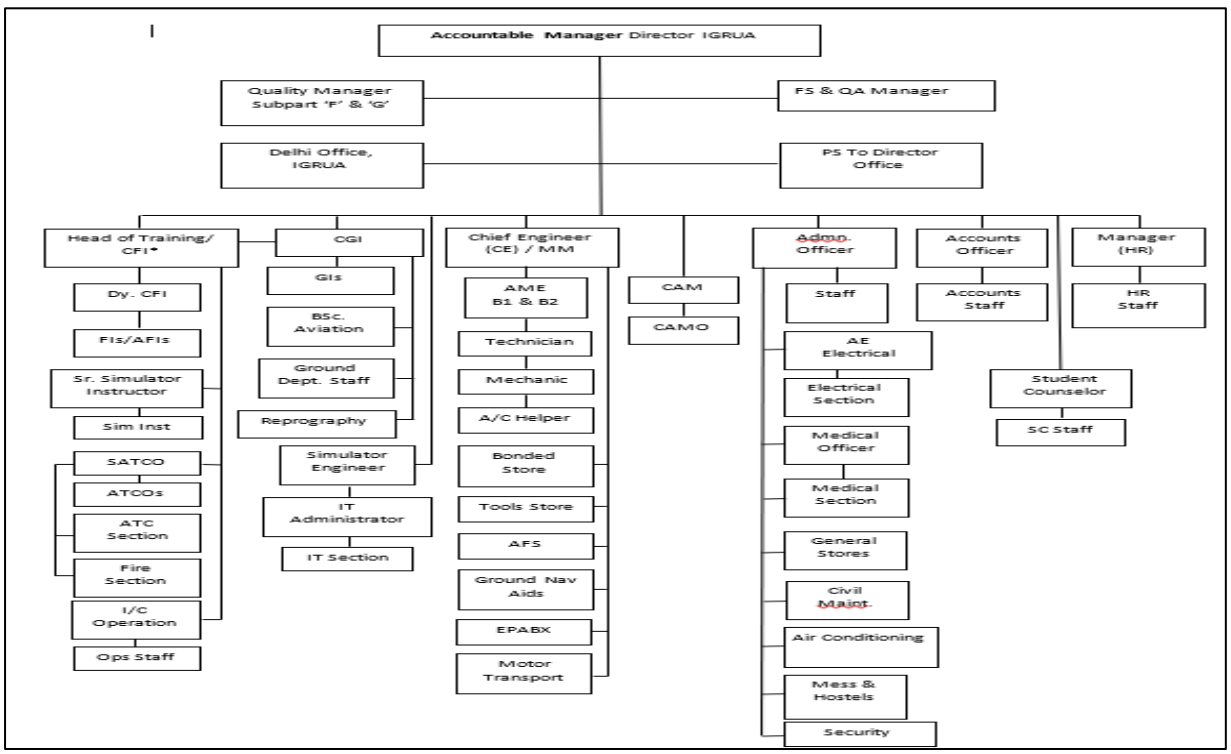

Fig.11: Organization Chart of the operator

The Chief Executive of the organization is the Director who is the Accountable Manager having both the administrative and financial control in the organization. M/s IGRUA is approved by DGCA as a Flying Training Organization (FTO) as per CAR Section-7, Series D, Part-I and has the approval for conducting flying training courses for CPL, PPL, SPL, IR, FIR(A) training, etc. The FTO has fleet of Trinidad TB-20, Zlin 242L, Diamond DA-40 and Diamond DA-42 aircraft. The FTO has in house maintenance setup as per CAR 145 which is approved by DGCA and was valid on the day of accident. The organizational chart of the flying club is shown in the figure 9 above.

1.17.1.1 Training & Procedure Manual (TPM) of the Organisation

The organization's Training and Procedure Manual (TPM) Issue 03 Rev 01 was issued in April 2022 after approval of DGCA.

1.17.1.1.1 Duties & Responsibility of Various Post holders

A) Accountable Manager

The Accountable Manager shall be the Director of the organization holding statutory powers conferred by the Ministry and the Appointment Committee of the cabinet. The Director shall have operational, administrative, financial and legal powers as per the approved Rules and Regulations of IGRUA. The Director shall ensure smooth functioning of the organization and will have overall responsibility of all operational and engineering activities covered under the scope of approval certificates issued by the DGCA.

Succession of Command:

In absence of the Accountable Manager, the Civil Aviation Ministry shall depute a suitable official from IGRUA or from the Ministry to exercise financial powers and to take care of day-to-day functioning of the organization.

B) Head of Training (Chief Instructor)

Chief Instructor is Head of Training at IGRUA, Senior most CFI will be Chief Instructor and will be appointed by the Accountable Manager.

Succession of Command:

During the temporary absence of Chief Instructor, Senior Most Chief Flying Instructor will take over the responsibilities of Chief Instructor.

C) Chief Flying Instructor (CFI)

Chief Flying Instructor is responsible for overall conduct of Flying Training, which may include following:

- Authorize all training flights
- Conduct of SPL & FRTOL (R)
- Patter Training for issue of AFIR(A) & FIR (A)

- Skill Tests for issue/renewal of Pilot Licenses
- Authenticate the entries in Pilot's Logbook
- Standardization Checks for all Flying Instructors

Succession of Command

During the temporary absence of CFI, any other CFI/Senior Most Deputy Chief Flying Instructor (DCFI) will take over the responsibilities of Chief Flying Instructor.

D) Deputy Chief Flying Instructor (Dy. CFI)

Deputy Chief Flying Instructor will be overall in-charge of the Flying Training activities in the absence of CFI which may include following

- Authorize all training flights
- Conduct of SPL & FRTOL (R)
- Skill Tests for issue/renewal of Pilot Licenses
- Authenticate the entries in Pilot's Logbook
- Standardization Checks for all Flying Instructors

Succession of Command

During the temporary absence of CFI & Dy.CFI, senior most FI (decided by the Management) will be overall in-charge of the Flying Training activities.

1.17.1.1.2 Chapter 5 of TPM

Para 5.11 contains guidelines on 'Maps and Charts' required to be carried for the flight. As per this section of TPM,

Maps and charts required to be carried for the flights:

For VFR flights, pilots are to carry Geological survey of India map with scale of 1 million, Lambert's conformal conic projection of Lucknow area. For operations from Gondia & Kalaburagi map of Nagpur & Shamshabad area is to be used. For instrument approaches at various airports, respective Jeppesen Approach charts are to be used.

1.17.1.1.3 Chapter 7 of TPM

Para 7.4 lays down the procedures to be followed for authorization and supervision of flights as given below:

Authorization and supervision of flights:

Authorization and supervision of flights are to be carried out by designated personnel (CI/CFI/DCFI/FI) duly approved by DGCA. In addition, all flying instructors are to supervise flights in their capacity to ensure safe and efficient conduct of flying training.

1.17.1.1.4 Chapter 8 of TPM

Para 8.2 lays down procedures for aircraft handling and its responsibilities.

Aircraft handling (including checklists, limitations, aircraft maintenance and technical logs, in accordance with relevant requirements):

Safe handling of the aircraft is primary responsibility of pilot in command. PIC shall have thorough knowledge of aircraft limitation, aircraft maintenance, technical log including checklist, in accordance with relevant requirements.

1.17.1.2 Analysis of data extracted from Garmin Units

The Diamond DA40 aircraft (including the accident aircraft VT-FGL) being utilized by the operator for the flying training is equipped with Garmin G1000 unit. Two Garmin GDU 1040 displays are installed in the Diamond instrument panel. One is configured as a PFD and the other as a MFD (Configuration is determined by wiring harness). Both displays provide control and display of nearly all functions of the G1000 integrated cockpit system. The displays are located side-by-side with the GMA 1347 Audio Panel located in the middle. SD card slot is provided on the Garmin unit which captures some of the aircraft parameters.

The operator had developed in-house procedures for analyzing the data from these units. The operator is utilizing the data from these Garmin units for supervision of the flying training activities. The practice of analyzing the data as per these procedures were in place even before the issuance of DGCA Circular 01 of 2022 dated 22 November 2022 wherein DGCA had mandated all FTOs to analyze the data from these units for supervision of flying training activities. Following are the salient procedures being followed in the organization for the analysis of data.

- Data for every single engine aircraft is recorded in an SD card; the same is then individually extracted by the radio engineer at the end of the day and uploaded into the main system.
- The data is then shared on lane from the radio engineering department and input in the FDR date folder for analysis. The access of this folder being available to the analyst and the radio engineering department.
- The data of the previous day is available within FDR date folder and can then be analyzed by the flight data analyst.
- A print out of the fleet utilization from operation along with the data received from the radio engineering is used to determine the sortie for analysis.
- The data is positively analyzed and any deviations or exceedances are recorded in a file and a daily report prepared by the flight data analyst; the same of which is submitted to and signed by the flight safety officer.
- The data for aircrafts is received by FDA every fortnight in excel sheet format directly Downloaded from Garmin G1000.
- Each Sortie is recorded in an individual file in excel file that records the parameters of the aircraft every second after the powering ON of the electrical Systems.

- The data is stored on central servers and is locally downloaded to analyze in order to protect the original data.
- Flight data analysis is based on the routine analysis of data recorded. The data for all sorties is analyzed with priority analysis being given to solos.
- This data is compared against pre-defined enveloped and values, to check whether the aircraft has been flown outside the scope of the standard operating procedures (safety events as published in the IGRUA TPM).
- After receiving the data, it is examined to look for any deviations, keeping a close lookout for variations in the parameters mentioned above.
- Google Earth in Conjunction with Garmin Flight Fight Log Software are used to covert the above-mentioned Excel CSV File into GPS Track Which is then observed for track, altitude and procedure deviations as mentioned in IGRUA TPM.
- For approach management analysis the above-mentioned data is compared with an Excel template designed in house to present the aircraft's glide path, speed and touchdown Data in Graphical format for better understanding.

The investigation team perused the flight data collected from some of the aircraft (including earlier downloaded data of the accident aircraft) and some of the analysis being carried out by the organization. It was observed that the most of the data were being analyzed for solo training flight. On enquiring about the same, the organization responded that Dual Sorties are analyzed only when time permits as most of the time is taken to analyze the solo sorties.

1.18 Additional Information

1.18.1 Accidents pertaining to Flying Training Organizations

In the recent past there have been number of aircraft accidents involving Flying Training Organizations in the country. In view of the same, the investigation team had carried out a data analysis of these accidents for the past 11 years i.e. from the year 2015 to 2025.

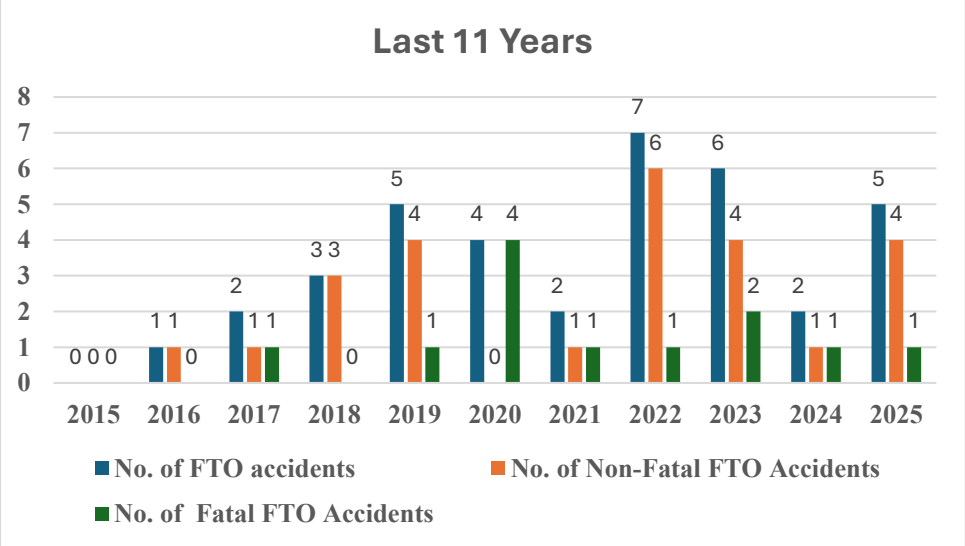

Fig 12: Graph FTO Accidents 2015-2025

It was observed that there has been a total of 37 accidents involving Flying Training Organizations during this period. Out of these 37 accidents, 12 accidents were fatal. There was no accident in 2015 involving FTO. From the period 2015 to 2017 there were 03 accidents involving FTO. However, the cases started to increase gradually from the year 2017 onwards and reached up to 05 in the

year 2019 and 07 in the year 2022. In 2020, even though, lockdown was imposed and flying activities were put on hold for few months across all the FTOs, four aircraft belonging to different Flying Training Organizations met with accident. All these accidents were fatal.

Analysis of these data revealed the following: -

- Out of the total 37 accidents, 60% of accidents were during solo flying training.
- 18% of the total solo flying accidents were fatal, whereas, 53% of the total dual flying accidents were fatal.
- About 60% accidents occurred during solo flying training exercise and 40% accidents occurred during dual flying training exercise.
- Analyzing the data of fatal accidents, revealed that about 67% of the fatal accidents occurred during dual flying exercise i.e., while student pilots were flying under the supervision of an instructor on board.

Further, on analyzing the probable cause/contributory factor(s) of these accidents for both involving dual flying exercise and solo flying exercise separately, it was observed that

- for solo flying training exercise, about 50% of the accidents occurred due to lack of training/ supervision.
- for dual flying training exercise about 80% of the accidents occurred due to non-adherence to SOP.

The non-adherence of SOP, was attributed to the following aspects: -

- The aircraft was involved in unauthorized activities such as unauthorized low flying, deviating from authorized flight path, acrobatic manoeuvers.
- Carrying out flying training in low visibility below VMC.
- Not performing the correct pattern for landing/take-off, etc.
- Most of these accidents occurred in an uncontrolled airfield/region.

Similar analysis was also carried out earlier by AAIB to analyze the trend of these accidents and it has been observed that the trend of these accidents is similar in nature i.e. the number of accidents involving the flying training organizations and their causal factors were also similar. From the year 2023 to 2025 there have been 13 accidents involving FTOs out of which 04 were fatal.

1.18.2 DGCA Flying Training Circular 01 of 2022

DGCA recently has issued a flying training circular 01 of 2022 dated 22 November 2022 regarding “Monitoring of training in Flying Training Organization” with the objective to enhance DGCA oversight over flying training and ground training activities of Flying Training Organization for improving the safety of operations and quality of training. It is also mentioned that this would also facilitate instructors in analyzing the performance of the trainee pilots and investigations by DGCA.

The circular covers following aspects for monitoring of flying training:

- Installation of Camera

- Flight data monitoring in aircraft

A timeline was given for making necessary arrangements for implementation of the mandatory requirements given in the circular. As per the circular,

- FTOs operating with aircraft equipped with glass cockpit or ADS (B) shall monitor, analyze and maintain the data from the date of issue of this circular.
- FTOs operating with aircraft not pre-equipped with glass cockpit or ADS (B) shall devise a method within 90 days for recording and monitoring of the flights to check if flight path flown by their trainee pilots and instructors are as per flight authorization.

However, not all FTOs were able to fully implement the circular because of various limitations and one major limitation was that most of the FTOs are using older aircraft which does not have the glass cockpit, thereby no pre-installed/factory fitted Garmin units which records basic flight data as in case of newly manufactured glass cockpit aircraft. Hence, the FTOs with glass cockpit aircraft were able to implement the requirements and as on date the other FTOs are yet to implement the same.

The said circular was amended and re-issued on 03 September 2025 wherein the requirement of flight data analysis of the FTO on daily basis was increased from 25% to 100 % of training flights. Further, requirement of VHF recording was also introduced. As per the circular the requirements were laid down as below: -
In order to enhance safety, improve communication skills of trainees, and facilitate post-flight monitoring and analysis, all FTOs are to ensure that:

- The ground-to-air/ air-to ground communications between the aircraft and ground RT operator shall be recorded in a suitable VHF communication recording system, at uncontrolled airfields where AAI ATC facility is not available and at controlled airfields during off watch hours.
- The recorded data shall be securely stored and maintained for a minimum period of three (03) months.
- All FTOs shall procure, install, and maintain an appropriate recording device/ system capable of meeting the above requirements within 30 days from the date of revision of this circular.

The timeline given to implement this requirement was 30 days from the issue of amended circular, however, during the recent investigations being carried out by AAIB, it was established that this additional requirement of VHF recording was also not implemented by all the FTOs even after the completion of the timeline given in the circular.

1.19 Useful or effective Investigation Techniques

Nil

2. ANALYSIS

2.1 Serviceability of Aircraft

The aircraft had a valid C of A and ARC as on date of accident. Scrutiny of Log books revealed that as on 18 March 2023, both aircraft and its engine were maintained as per the required maintenance program. All inspections (Pre-flight checks, Service Checks, Weekly Checks) were carried out as and when due.

Scrutiny of the aircraft records revealed that ADs, SBs and all mandatory modifications were complied with at the time of accident. Further, scrutiny of snag register also revealed that there was no pending snag reported on the aircraft prior to the accident flight and it was not operating under any MEL.

The engine was retrieved from the wreckage and was strip examined at a DGCA approved facility. The strip examination did not reveal any abnormality which could have contributed to the accident. It was established that the engine was delivering the required power at the time of accident and any anomaly observed in the engine were consequential to the accident. Further, the crew also did not report or gave any distress call at any point during the training flight.

From the above, it is concluded that serviceability of the aircraft was not a contributory factor to the accident.

2.2 Weather

On the day of accident, the weather reported at Gondia and nearby stations at 1000 UTC were as follows: -

Station	Time (UTC)	Winds (°/Kts)	Visibility (Meters)	Temp (C°)	QNH
VAGD (Gondia)	1000	135/08	5000 (Hz)	28	1011
VANP (Nagpur)	1000	090/04	4000 (Hz)	27	1010
VERP (Raipur)	1000	050/05	5000 (Hz)	20	1011
VAJB (Jabalpur)	1000	180/07	5000 (Hz)	29	1010

The local weather at Gondia in the morning on 18 March 2023 was not conducive to carry out the flying training activities and the visibility was found to be varying from 1500 m to 3000 m. However, the weather improved in the afternoon and the flying training activities were started in the afternoon when the visibility was found good for flying training operations. As per the weather reported at Gondia and other nearby stations at the time of accident, the weather was fine and was conducive to carry out the flying training activities

Further, the statements of the eye witnesses and instructors also confirmed that the weather was fine and conducive for the training flight. The aircraft also did not report any adverse weather at any point during the entire flight.

Hence, from the above, it is concluded that weather was not a contributory factor to the accident.

2.3 Crew Aspect

2.3.1 Crew Flying Experience and Qualification

The instructor on board had a valid instructor rating as on date of accident. The license was valid and all the required training/medical for operating the flight were valid as on date of accident. The instructor was a CPL holder qualified on type and had a total flying experience of about 802:50 Hours and did all the flying on the type i.e. Diamond DA40 aircraft. The instructor was qualified to operate the flight and to impart training to the student pilot.

The instructor did his CPL training from IGRUA and later in May 2022, after completing instructional training from IGRUA, joined the organization as AFI with a total flying experience of 242 hrs. Since the instructor did all the flying on Diamond DA40 and in IGRUA, he was quite familiar with the aircraft and the topography/restriction of the Gondia aerodrome area.

The trainee pilot held a valid student pilot license and was qualified to operate the flight. All the requirements including medical, licenses were current as on date of accident. The trainee pilot had about 55 hrs of total flying experience and did all the flying training exercise on Diamond DA40 aircraft.

2.3.2 Crew handling of aircraft and non-adherence to SOP.

2.3.2.1 Non-Adherence to TPM procedures

As per the authorization, the student pilot was authorized to carry out instrument flying training along with an instructor on VT-FGL. The crew requested tower for sector east and the ATC subsequently cleared the aircraft for departure from runway 04 with instruction to maintain 5000 feet for sector east. The crew acknowledged the same and informed that it will climb and maintain 5000 feet and will turn right for sector east. Subsequently, the aircraft informed that they are 10 miles and maintaining 5000 feet in sector east. Thereafter, the tower cleared the aircraft to operate in sector east between 15 miles to 25 miles and instructed to report “All Ops Normal” call every 10 minutes as per the procedure. The aircraft acknowledged the same. This call was made by the aircraft at around 094431 UTC and it was supposed to make the call out at around 0954 UTC, however, no such call out was made by the aircraft.

As per the eyewitnesses and local villagers, the aircraft came very low and was flown over a village at a very low height. The aircraft was then flown to another nearby village wherein it was again flown at a very low altitude. The villagers further stated that the height of the aircraft was very low so much so that they feared it might hit one of the water tanks (height of approximately 40-50 feet) installed in the village. Thereafter, the aircraft was seen to have made two three rounds around the nearby pond. The aircraft was then seen to have headed towards the hill where it crashed and the villagers heard the loud bang sound.

The crew did not ask ATC for any permission to fly lower than the assigned altitude of 5000 feet to perform any exercise which may require descent to lower altitude than the assigned altitude and they neither gave call for any exigency. Further, as stated by the eyewitnesses, the aircraft made two-three circles around the nearby pond before heading towards the hill which indicates that the aircraft was in control of the flight crew. Hence, in all probability the crew deviated from the assigned altitude and flown the aircraft at a very low altitude close to the terrain. This is non-adherence to the SOP which eventually resulted into the accident.

2.3.2.2 Non-adherence to AFM procedures

When the crew were flying the aircraft over the village and subsequently towards the hills, the aircraft was flown around the nearby pond at a low altitude. This type of manoeuver is possible only when there is sudden and abrupt change in attitude of the aircraft. This was again non-adherence to the laid down SOP in TPM and also to the Aircraft Flight Manual, wherein it is clearly laid down that the aircraft is not certified for the acrobatic maneuvers.

Apart from unauthorized deviation from the assigned altitude and flying the aircraft beyond the operational limitations stipulated in AFM, the aircraft was flown close to the terrain without ensuring the operational safety. This non-adherence to the SOP and unauthorized flying of the aircraft eventually lead to the accident.

2.4 Organisation Aspect

2.4.1 Internal SOP for flight data analysis

The Diamond DA40 aircraft (including the accident aircraft VT-FGL) being utilized by the operator for the flying training is equipped with Garmin G1000 unit. SD card slot is provided on the Garmin unit which captures some of the aircraft parameters.

The operator had developed in-house procedures for analyzing the data from these units. The operator is utilizing the data from these Garmin units for supervision of the flying training activities. The practice of analyzing the data as per these procedures were in place even before the issuance of DGCA Circular 01 of 2022 dated 22 November 2022 wherein DGCA had mandated all FTOs to analyze the data from these units for supervision of flying training activities.

The investigation team perused the flight data collected from some of the aircraft (including earlier downloaded data of the accident aircraft) and some of the analysis being carried out by the organization. It was observed that the most of the data were being analyzed for solo training flight. The priority was given to supervise the performance of the student pilots in order to understand their progress and to see if they are deviating from any procedure during their solo sorties. DGCA vide Circular 01 of 2022 dated 22 November 2022 had mandated all FTOs to analyze 25% of the flight data. The instructor on board who has been associated with the organization for long was fully aware of this practice of data analysis being followed in the organization. Hence, it is highly probable that this organizational practice may have prompted them to deviate from the assigned altitude and also to violate the SOPs which eventually

resulted into the accident. Hence, this organizational practice of non-supervision of flight data of dual flights was a contributory factor to the accident.

2.5 Accidents involving Flying Training Organisation Aircraft

2.5.1 Analysis of FTO accident data

The investigation team analysed the accident data of last 11 years i.e., from the year 2015 to 2025 involving aircraft of Flying Training Organisation and it was observed that there has been sharp increase in accident rates involving flying training organization in the past few years. A total of 37 accidents occurred during this period involving Flying Training Organisation. Out of these 37 accidents there have been 12 accidents wherein fatalities were involved. Looking at the trend, it is observed that the number of fatal accidents is more (about 67%) in case of dual flying training exercise wherein the aircraft has been under the command of flying training instructor as compared to solo flying training exercise carried out by student pilots themselves. The instructors are entrusted with the responsibility to impart training and safe conduct of flight to ensure that students follow correct procedure while performing different flying training exercises. However, looking at the trend of probable cause of most of the fatal accidents wherein instructors are involved, that is not the case. The analysis of the probable cause of these fatal accidents revealed that in most cases standard procedures were not followed and there was clear deviation from the laid down operating procedures wherein the aircraft was involved in unauthorized activities such as unauthorized low flying (flying close to the terrain), deviating from authorized flight path, performing acrobatic manoeuvers, carrying out flying training in low visibility below VMC, not performing the correct pattern for landing/take-off.

During the investigation of these accidents carried out by AAIB, it was observed that this non-adherence to the SOP was attributed to lack of supervision and more importantly lack of safety culture in the flying training organizations which is majorly contributing to these accidents. Most of these flying trainings are being carried out from the uncontrolled airfields wherein it is challenging to have a control or oversight by the DGCA in the absence of any recording media such as ATC tape, Surveillance Radar, etc. Moreover, these flying training exercises are carried out on basic training aircraft with no flight data recording medium like CVR, DFDR, etc. except some of the modern aircraft (with glass cockpit) which have Garmin units which records flight data. Due to these findings/shortcomings and to enhance the supervision of training flights/oversight by DGCA of the operations carried out by flying training organizations, AAIB issued several safety recommendations from time to time through their investigation reports to prevent re-occurrence of these type of occurrences. The safety recommendations included installation of CCTV cameras in uncontrolled airfields, recording of flight data with suitable means, recording of VHF communication between tower and aircraft, etc.

2.5.2 Flying Training Circular issued by DGCA

Based on the various safety recommendations issued by AAIB from time to time, DGCA has issued a flying training circular 01 of 2022 dated 22 November 2022 regarding “Monitoring of training in Flying Training Organization” with the objective to enhance DGCA oversight over

flying training and ground training activities of Flying Training Organization for improving the safety of operations and quality of training. It is also mentioned that this would also facilitate instructors in analyzing the performance of the trainee pilots and investigations by DGCA. The circular covers some of the aspects required for enhancing the safety oversight by DGCA and also for improving safety of flying training organizations as they will have more resources to supervise the flying training exercises. The circular was later amended in September 2025 wherein the flight data analysis of the FTO has been increased from 25% to 100% of flights. Further, provisions for VHF communication recording systems were included in the circular. In the amended circular dated 03 September 2025, it was mandated to all FTOs to procure, install, and maintain an appropriate recording device/system capable of meeting the VHF recording requirements (as mentioned in the circular) within 30 days from the date of revision of this circular.

However, through the various recent investigations being carried out by AAIB, it has been observed that the requirements laid down in this circular is not fulfilled by all the FTOs. Some of the FTOs who are operating training aircraft with glass cockpit wherein Garmin units are installed were able to meet the above requirements. The FTOs operating with basic training aircraft with no pre-installed Garmin units are yet to meet these requirements for flight data analysis. Further, the requirement of VHF recording and installation of CCTV cameras are also not implemented by all FTOs. Hence, it is evident that despite issuance of these mandatory requirements by DGCA, they are not being implemented by all FTOs in toto.

The total number of FTO accidents reported in the last three years i.e. from 2023 to 2025 is 13 out of which 04 accidents were fatal in nature. The 13 FTO accidents reported in the last 03 years' time amounts to about 35% of the total accidents reported in the last 11 years (2015-2025). This further indicates that despite issuance of mandatory requirements by DGCA, there is a rise in FTO accidents recently. The fact that most of these flying training activities are carried out from uncontrolled airfields and on basic small training aircraft, the implementation of the requirements stipulated in the circular becomes that much important.

In this case, a medium for recording of flight data was available in the aircraft but the data card and the Garmin unit could not be recovered as the aircraft was completely burnt in the accident.

2.5.3 Other Safety Aspects

DGCA had issued various requirements from time to time through its CAR/Circulars to regulate and enhance the flying training operations. In spite of the fact that these requirements have been incorporated in the various organizational documents by FTOs, they are not fully implemented in practice. This is due to lack of safety culture in the flying training organizations which needs to be improved. The student pilots and instructors should be made aware of safety standards so that they ensure compliance with the safety standards. This can be achieved through regular/mass briefings wherein students and instructors are made aware of repercussions of not following the standard procedures by sighting examples of these accidents/incidents and discuss the factors which led to these accidents/incidents.

2.5.4 Accidents of Dual training flights

The analysis of FTO accidents further reveled that out of 37 FTO accidents reported in the last 11 years, 15 accidents were involving dual training flights i.e. 40% of the total FTO accidents. The analysis further revealed that out of the 12 fatal FTO accidents, 08 accidents were involving dual training flights which is about 67% of the total fatal accidents. This indicates that the SOPs are being breached wherein an instructor is on board which is contrary to the fact that in an ideal situation when an instructor is on board the flight is supposed to be flown adhering to the SOPs as compared to the solo flights wherein students are bound to make some mistakes.

This aspect was also analyzed by the investigation team by studying the various attributes of the involved instructors and the pattern of induction of instructors in FTOs involved in accidents. One such attribute which was observed is that most of the instructors are being inducted immediately after completion of their flying training requirements and acquiring CPL. They are then given required patter flying trainings and rushed to the instructional role without giving due diligence to the total flying experience (including flying experience on type of aircraft being utilized by the organization). This aspect can be improved by providing a CPL holder an additional flying experience (defined based on requirement) before they are released for instructional flying.

2.6 Circumstances leading to the Accident

On the day of accident, the weather conditions in the morning were not conducive to carry out the flying training activities, hence, no flying training was carried out in the morning. The flying training activities started in the afternoon after the weather conditions improved and were conducive for the flying training exercise. Accordingly, the weather at the time of accident was reported to be fine with visibility more than the required minima with no significant change.

The AME carried out the first pre-flight inspection of the aircraft VT-FGL before handing over the aircraft to operations department and no abnormality was observed. No abnormality was reported by the crew before operating the flight. The crew contacted the tower and informed that the aircraft is ready for departure and requested for sector east. The ATC while giving clearance for departure gave instruction to maintain 5000 feet for sector east. The aircraft took-off from runway 04 and then reported turning right for sector east and further informed that they will call after establishing sector east. Thereafter, the aircraft informed that they are 10 miles and maintaining 5000 feet in sector east. The tower then cleared the aircraft to operate in sector east between 15 miles to 25 miles and instructed to report “All Ops Normal” call every 10 minutes as per the procedure. The aircraft acknowledged the same. This call was made by the aircraft at around 094431 UTC and it was supposed to make the call out at around 0954 UTC, however, no such call out was received by the ATC. During this period, the aircraft was involved in unauthorized low flying wherein the aircraft deviated from the assigned altitude and was flown over a village close to the terrain. As per the statement of the eyewitnesses, the aircraft was flown so low that they thought it may hit one of the water tanks situated in village of approximately 40-50 feet height AGL. The aircraft was also flown over and around a pond nearby

the village. This implies that the aircraft was in control of the flying crew and they also did not make any distress call.

The aircraft was then seen approaching towards the hills. It is highly probable that while the aircraft was approaching the hills, the crew tried to pull back hard on the control stick to force the airplane to climb in order to clear the hill. However, as the aircraft was flown close to the terrain, pulling back excessively might have increased the aircraft's angle of attack, thereby increasing the aerodynamic drag. In this scenario the aircraft instead of climbing faster, got settled into a high-drag, high-pitch descent straight into the trees right before the crest of the hill.

3. CONCLUSION

3.1 Findings

3.1.1 The Certificate of Airworthiness, Certificate of Registration and Airworthiness Review Certificate of the aircraft were valid on the day of accident.

3.1.2 The aircraft and its engine were being maintained as per continuous maintenance programme approved by the DGCA. All other laid down requirements pertaining to serviceability of aircraft were complied with, hence, serviceability of the aircraft did not contribute to the accident.

3.1.3 The weather in and around Gondia was conducive to carry out flying training exercise and hence did not contribute to the accident.

3.1.4 The Flight Instructor was holding a valid license and was qualified to operate the training flight.

3.1.5 The training flight was authorized by Dy. CFI for a dual general flying training by day. The crew decided to perform the training flight in sector east which was also approved by the ATC.

3.1.6 No distress or emergency call was given by the crew during the entire flight. The last call made by the crew on RT was when the crew acknowledged the clearance given by ATC to fly between 15 to 25 Nm at sector east maintaining 5000 feet.

3.1.7 The crew did not inform the ATC regarding any deviation from the assigned altitude of 5000 feet.

3.1.8 The aircraft was deviated from the assigned altitude and was flown at a very low height with abrupt maneuver beyond the limitations stipulated in AFM. This again was non-adherence to the laid down SOP.

3.1.9 Apart from unauthorized deviation from the assigned altitude and flying the aircraft very low, the aircraft was flown close to the terrain without ensuring the operational safety. The safety of the aircraft operations was compromised which subsequently resulted into the accident.

3.1.10 The ATC and thereafter other aircraft in flight tried to establish the contact on RT assigned frequency, however, no response was received from the aircraft.

3.1.11 ELT of the aircraft was activated after the accident and the organisation received message from local authorities regarding the accident.

3.1.12 The flying training organization was utilizing the flight data to analyze and supervise the flying training operations as per DGCA circular 01 of 2022. However, most of the analysis was carried out for solo flights only and not giving emphasis to dual training flights.

3.1.13 Analysis of accidents pertaining to FTOs during the year 2015 to 2025 revealed that:

- Most of the accidents in case of solo flying training exercise occurred due to lack of training/supervision.
- Most of the accidents in case of dual flying training exercise occurred due to non-adherence to SOP by the Instructor/Students.
- Most of the fatal accidents occurred during dual flying training exercise as compared to solo flying training exercise wherein standard procedures were not followed and unauthorized activities such as low flying, deviating from authorized flight path, acrobatic maneuvers, carrying out flying training in low visibility below VMC, not performing the correct pattern for landing/take-off, etc. were carried out.
- Most of these flying trainings are being carried out from the uncontrolled airfields and on basic training aircraft where there are no means such as ATC tape, Surveillance radar, flight data recorders, etc. to record flying training activities.
- There is lack of supervision and more importantly lack of safety culture in most of these Flying Training Organizations which is contributing to these accidents.
- The analysis of dual flying training accidents revealed that in most cases, the CPL holders were rushed to the instructional role without giving due diligence to the total flying experience.

3.1.14 DGCA Flying Training Circular 01 of 2022 dated 22 November 2022 and amended in September 2025 covers most of the aspects required for enhancing the supervision of training flights and safety oversight by DGCA. However, these requirements are not being implemented by all FTOs in toto.

3.1.15 Despite issuance of mandatory requirements by DGCA, there is a rise in FTO accidents during the last three years (2023-2025) which amounts to about 35% of the total accidents during last 11 years (2015-2025).

3.2 Probable cause of the accident

The accident occurred as the aircraft was flown close to the terrain, during which it impacted the trees and subsequently top of the hill, as a result of

- Non-adherence to the SOP, wherein the aircraft was deviated from the assigned altitude and was flown close to the terrain.
- Lack of supervision of dual training flights in the organization.

4. SAFETY RECOMMENDATIONS

It is recommended that

4.1 DGCA may take necessary steps to ensure compliance of the requirements stipulated in the Flying Training Circular 01 of 2022 by all FTOs. DGCA may also explore the potential viabilities

to overcome the various limitations associated with the compliance of this circular by the FTOs.

4.2 DGCA may check the feasibility of enhancing the requirements of induction process of the instructors by the FTOs wherein a minimum flying experience requirement (defined based on aircraft type) for a fresh CPL holder before they are released for instructional flying may be introduced to ensure overall operational safety.

4.3 DGCA may issue directions to all Flying Training Organizations to strictly adhere to the laid down healthy practices to enhance safety culture in their organization to ensure every individual involved in flying training operations follow the laid down procedures/guidelines in true letter and spirit.

APPENDIX A - Photographs of Aircraft Wreckage and Surroundings



Fig 1: Broken trees ahead of first impact point



Fig 2: Broken tree from root at first impact point on hill.





Fig 3 & 4: Trail of wreckage sliding down the hill after first impact.



Fig 5: Final wreckage position (wreckage completely burnt)

APPENDIX B - DGCA FLYING TRAINING CIRCULAR 01 OF 2022



GOVERNMENT OF INDIA
OFFICE OF THE DIRECTOR GENERAL OF CIVIL AVIATION
TECHNICAL CENTRE, OPP. SAFDURJUNG AIRPORT, NEW DELHI

FLYING TRAINING CIRCULAR 1 OF 2022

E-File No. DGCA-16034(11)/9/2020-DFT
Rev. 01 Dated: 3rd, Sep, 2025

Subject: Monitoring of training in Flying Training Organization (FTO).

1. Introduction:

The Flying Training Organizations operate from various controlled and uncontrolled airfields. Inspection/surveillance/audit of these flying training organization are carried out by DGCA as per CAR Section 7 Series D Part 1.

The objective of this circular is to enhance DGCA oversight over flying training and ground training activities of Flying Training Organization for improving the safety of operations and quality of training. This would also facilitate instructors in analyzing the performance of the trainee pilots and investigations by DGCA.

2. Applicability:

This circular is applicable to all DGCA approved Flying Training Organizations (FTO).

3. Methods of monitoring:

(i) Installation of Camera

a) All the FTOs shall install cameras of high resolution in FTO premises to ensure proper visibility of flying training activities. The cameras should be installed to cover the following view :

- Apron area
- Hangar
- Taxiway and runway
- Classrooms
- Examination Room
- Area where the flights are authorized in Flight Authorization register

b) SPL and FRTOL(R) exams shall be carried out under camera with live feed to Directorate of Flying Training (DFT) of DGCA which shall be intimated 03 days prior.

(ii) Flight data monitoring in Aircraft:

Many aircrafts available for flying training are equipped with glass cockpit (Garmin G1000/ G3X etc.) which has a provision of recording flight data and/ or fitted with ADS (B) which can also monitor the path followed by the aircraft. This provides opportunity for enhancement of training, improve training quality and objective surveillance. FTO shall ensure the following:

a) FTOs operating with aircraft equipped with glass cockpit or ADS (B) shall monitor, analyze and maintain the data from the date of issue of this circular.

b) FTOs operating with aircraft not pre-equipped with glass cockpit or ADS (B) shall devise a method for recording and monitoring of the flights to check if flight path flown by their trainee pilots and instructors are as per flight authorization. FTO shall install/ carry an equipment which automatically records at least following parameters:

i) Engine start/stop time- as feasible
ii) Flight path followed
iii) Height and Speed of aircraft at all times

The above data is to be maintained by all FTOs and safety manager shall carry out flight data analysis of 100% flights of the FTO on daily basis and maintain record of analysis.

(iii) VHF communication recording systems:

In order to enhance safety, improve communication skills of trainees, and facilitate post-flight monitoring and analysis, all FTOs are to ensure that:

a) The ground-to-air/ air-to ground communications between the aircraft and ground RT operator shall be recorded in a suitable VHF communication recording system, at uncontrolled airfields where AAI ATC facility is not available and at controlled airfields during off watch hours.

b) The recorded data shall be securely stored and maintained for a minimum period of **three (03) months**.

c) All FTOs shall procure, install, and maintain an appropriate recording device/ system capable of meeting the above requirements within 30 days from the date of revision of this circular.

4. Monitoring:

a) The FTO shall ensure that the surveillance cameras are functional (during

flying activities) and the camera feed must be displayed in the CFI, Dy. CFI and Flying Instructor room.

b) The FTO shall ensure that the recording of glass cockpit, ADS (B) or any other monitoring device is functional during flying activities.

c) In case the cameras/ADS (B) or any other monitoring device is nonfunctional then FTO should intimate DFT immediately via email and take action to make it functional within 15 days.

d) CFI/Dy. CFI/Safety Manager of the FTO shall preserve the recording of camera for at least 30 days and the flight data of all the devices for at least 06 months.

In case of any violation of the circular is observed or the record is not available as required in this circular or tampered, appropriate action as per the enforcement/ penal provisions contained in Enforcement Policy and Procedure manual (EPPM), CAR Section-7, Series-I, Part-V and CAR Section-7, Series-D, Part-1 will be taken.

This issues with the approval of the Competent Authority.